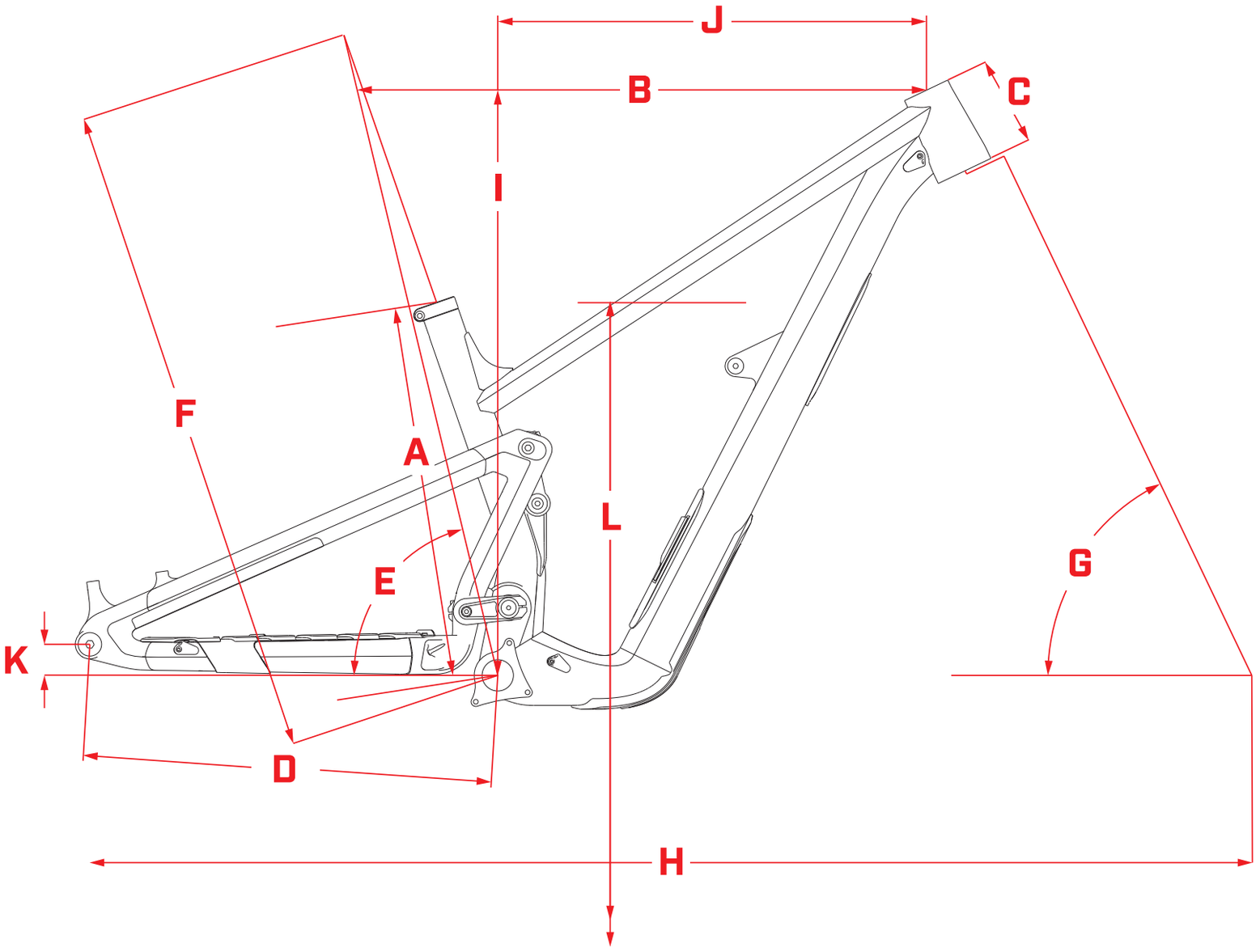
J
B
C
I
F
A
L
E
G
K
D
H